CITY OF UNION, KENTUCKY PHASE B PART 2

UNION SCHOOL ROAD RECONSTRUCTION PLAN – FEB 2023

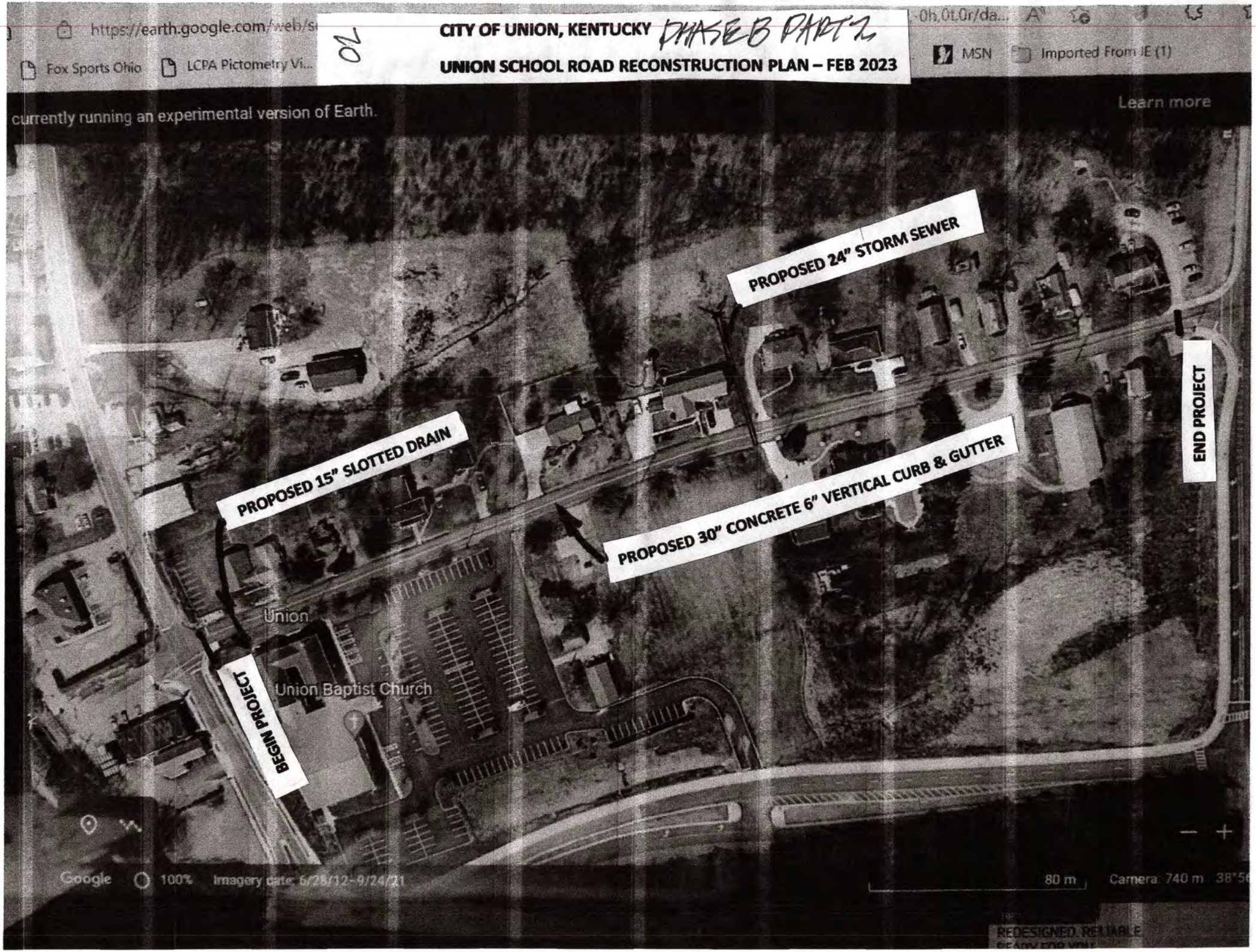

TYPICAL SECTION – URBAN SECTION

UNION
2023 SRP
PHASE B
PART 2

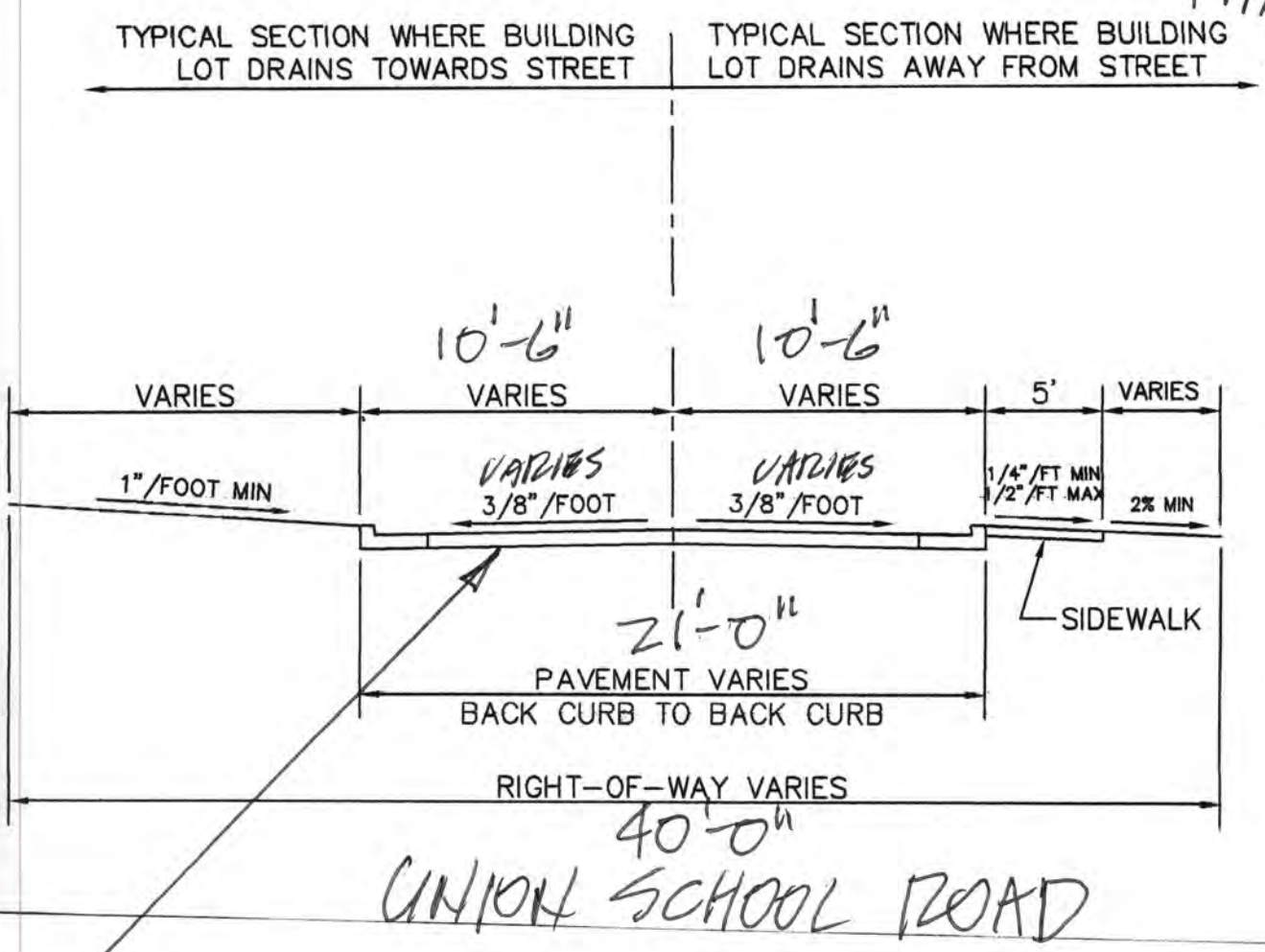

UNION SCHOOL ROAD

NOTE - Use Existing Asphalt Pavement as Twenty (20) Feet in width.
- CUT-IN New Vertical Curb and Gutter For New Twenty (20) width roadway between front face of curb on each side. for two (2) Ten foot lanes.

Boone County, Kentucky PHASE B PART 2

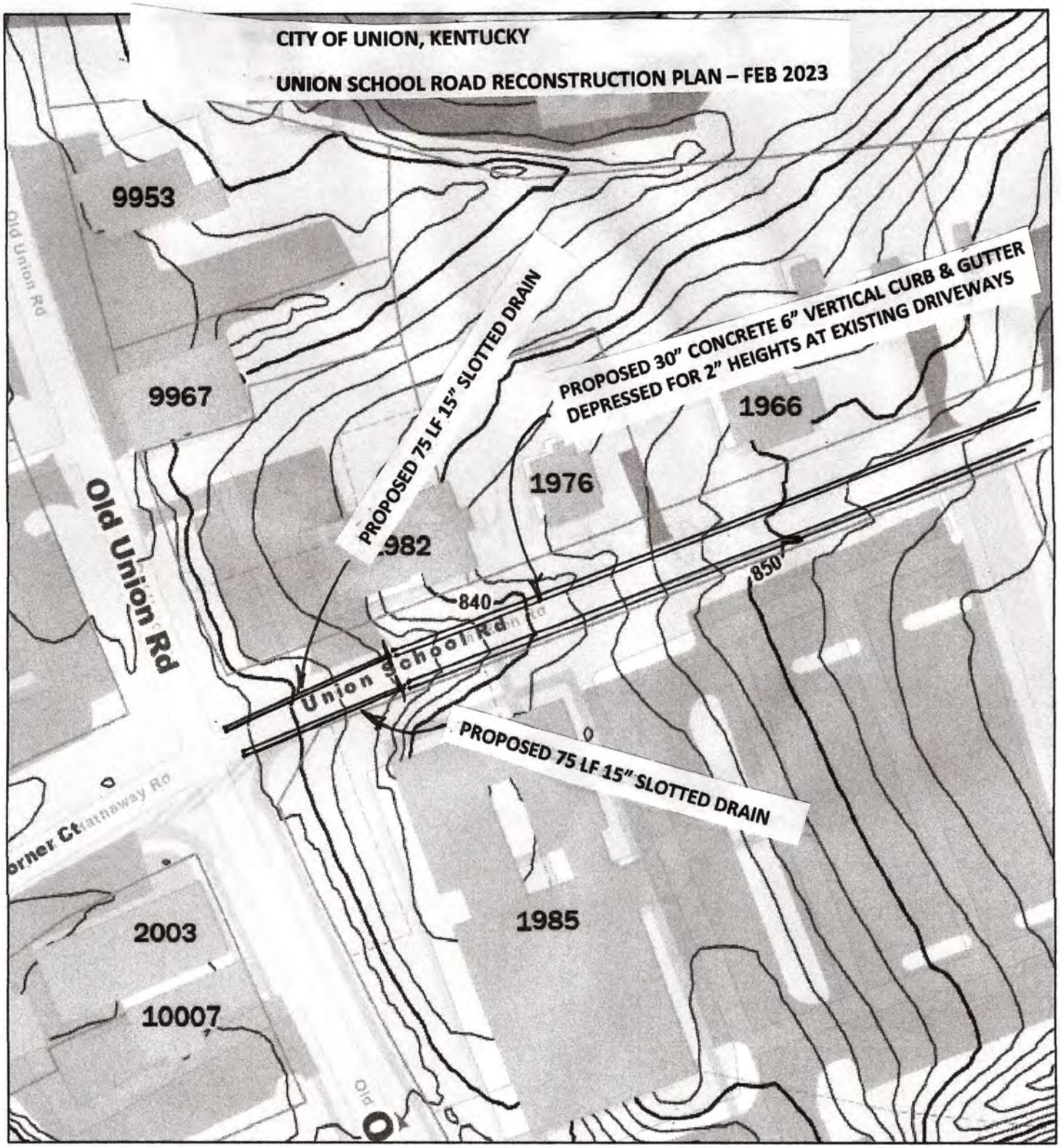

2/22/2023, 11:48:12 AM

1:1,128

0 0.01 0.01 0.03 mi

0 0.01 0.02 0.04 km

Buildings (LOD 18-21)

Tax Parcels (LOD 17-23)

Parcel Tract (outline)

Ten Foot Contours

Two Foot Contours

Roadways

Roadway

Private Roadway

Crosswalk

Parking Lots

Asphalt

Exterior Features

Driveway

Sidewalk

Streets (LOD 17-23)

One Way Arrows (TF)

One Way Arrows (FT)

Esri Community Maps Contributors, © OpenStreetMap, Microsoft, Esri, HERE, Garmin, SafeGraph, GeoTechnologies, Inc, METI/NASA, USGS, EPA, NPS, US Census Bureau, USDA, GIS Services Division, Boone County Planning Commission

Copyright 2023 | Boone County Planning Commission | All rights reserved.
Copyright 2023 | Boone County Planning Commission | All rights reserved.

22

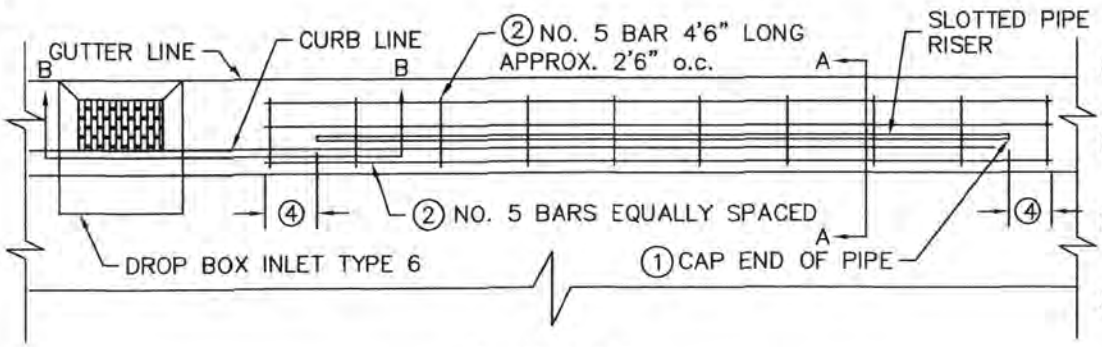

PLAN VIEW

① THE CAP SHALL BE A STANDARD MANUFACTURED ITEM FURNISHED BY THE PIPE SUPPLIER.

② ALL REINFORCING STEEL SHALL BE INCLUDED IN THE CONTRACT UNIT PRICE PER LINEAR FOOT OF SLOTTED DRAIN PIPE.

③ USE DROP BOX INLET TYPE 10 WITH VALLEY GUTTER (LIMITED TO 24" METAL PIPE SIZE), OR EQUAL.

④ EXTEND LONGITUDINAL BAR APPROXIMATELY 1'-6" PAST END OF SLOTTED DRAIN PIPE.

⑤ MINIMUM THROAT DEPTH FOR SLOTTED DRAIN PIPE SHALL BE 10".

⑥ CONTROLLED-LOW-STRENGTH-MATERIAL OR FLOWABLE FILL MAY BE USED FOR BACKFILL.

⑦ 12" MINIMUM DIA., 20' MAXIMUM LENGTH.

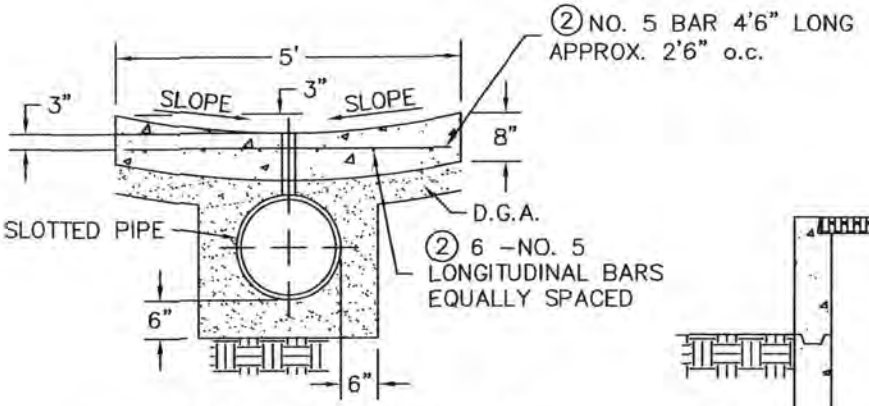

VALLEY GUTTER SECTION ③

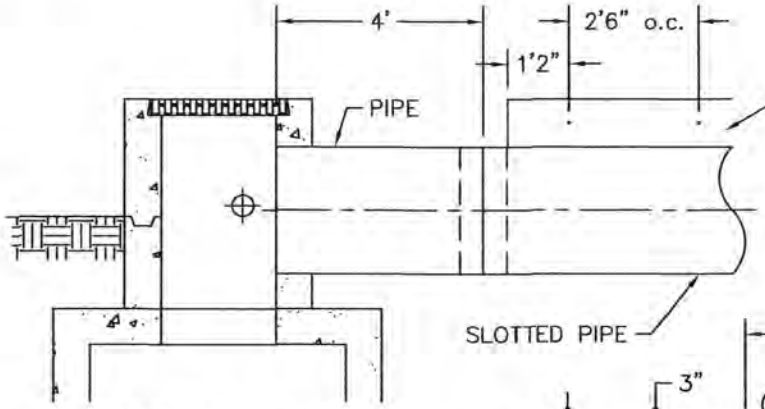

SECTION B-B

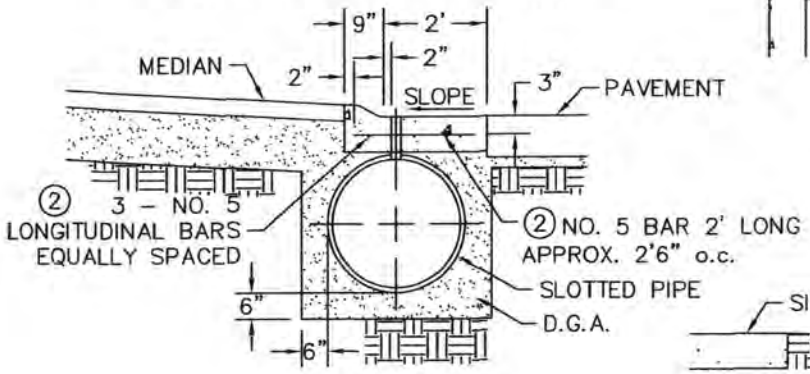

SECTION A-A
LIP CURB SECTION

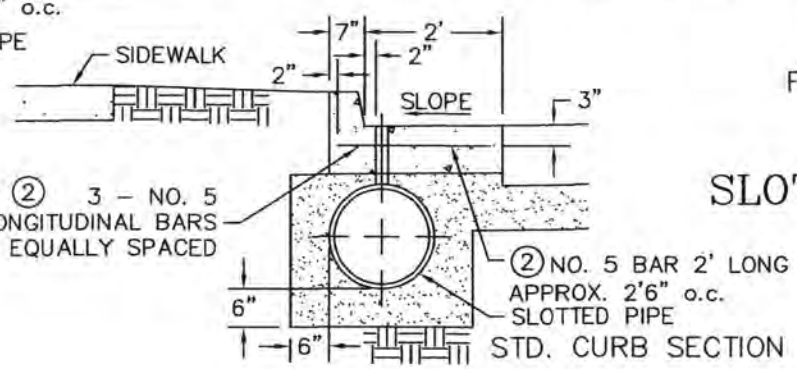

STD. CURB SECTION

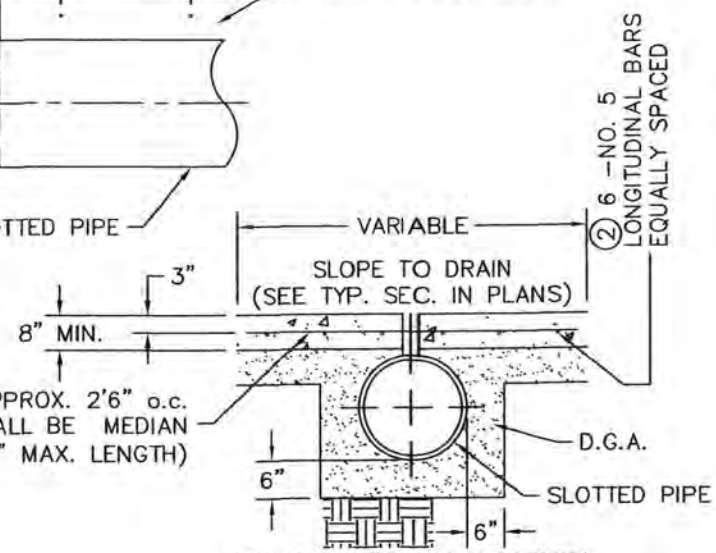

FLUSH MEDIAN SECTION

SLOTTED DRAIN PIPE

PHASE B PART 2

C.21

Boone County, Kentucky

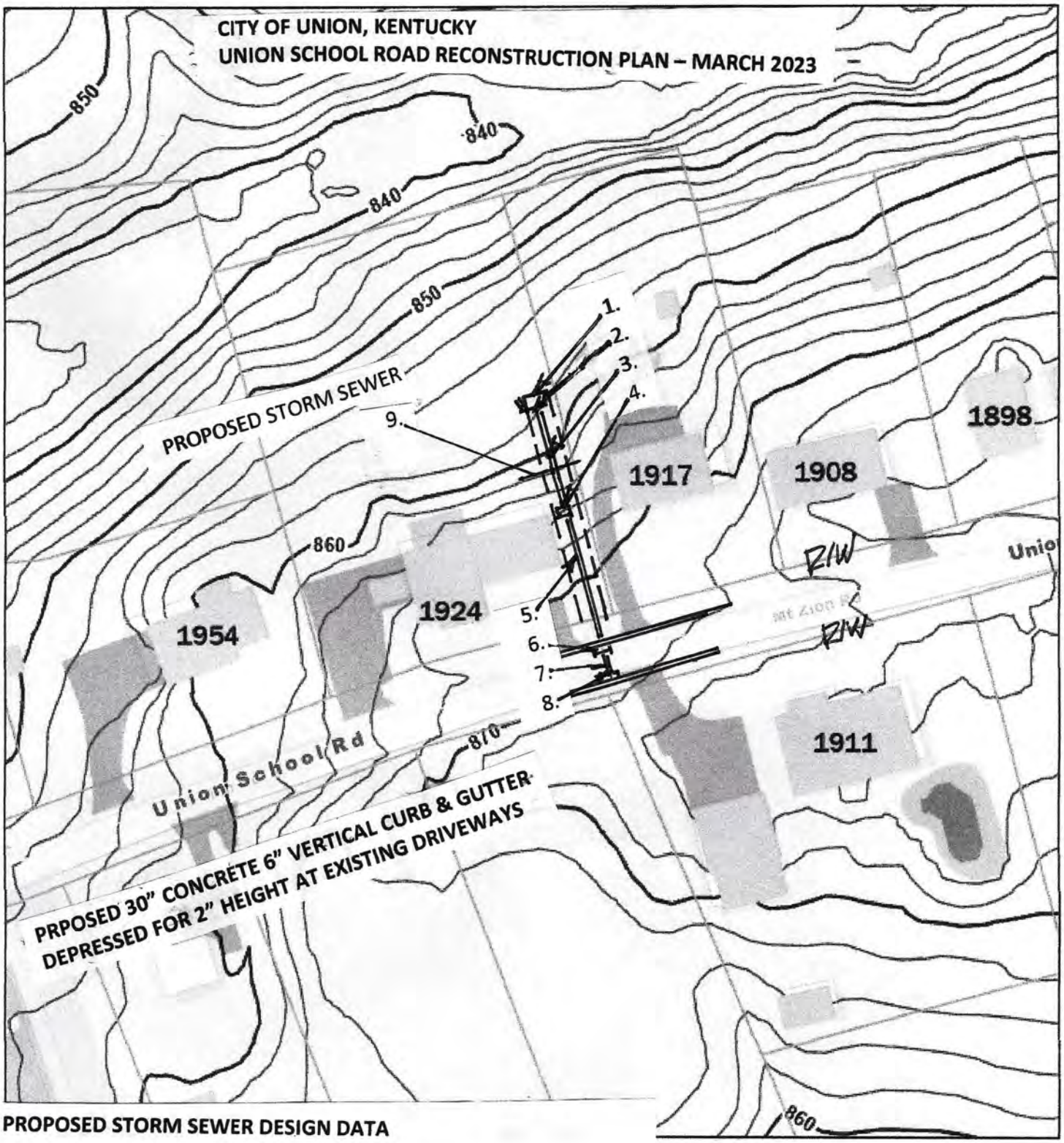

PROPOSED STORM SEWER DESIGN DATA

1. **APPROX TOP HEADWALL AT GRADE 858'**
2. **APPROX INV ELEV 855'**
3. **60 LF 15" STM SEWER AT +13.3% SLOPE**
4. **2' X 2' STM SEWER BOX W/TOP GRATE ELEV 866'; INV 863'**
5. **70 LF 15" STM SEWER AT +7.8%**
6. **DCCG CATCH BASIN STREET ELEV 871.5'; INV 868.5'**
7. **20 LF 15" STM SEWER AT +1.0%**
8. **DCCG CATCH BASIN STREET ELEV 871.5'; INV 868.7'**
9. **TWENTY (20) FOOT WIDE SEWER EASEMENT (BY CITY)**

1:1,128

0 0.01 0.01 0.03 mi

0 0.01 0.02 0.04 km

Esri Community Maps Contributors, © OpenStreetMap, Microsoft, Esri, HERE, Garmin, SafeGraph, GeoTechnologies, Inc, METI/NASA, USGS, EPA, NPS, US Census Bureau, USDA, GIS Services Division, Boone County Planning Commission

Copyright 2023 | Boone County Planning Commission | All rights reserved.

25A

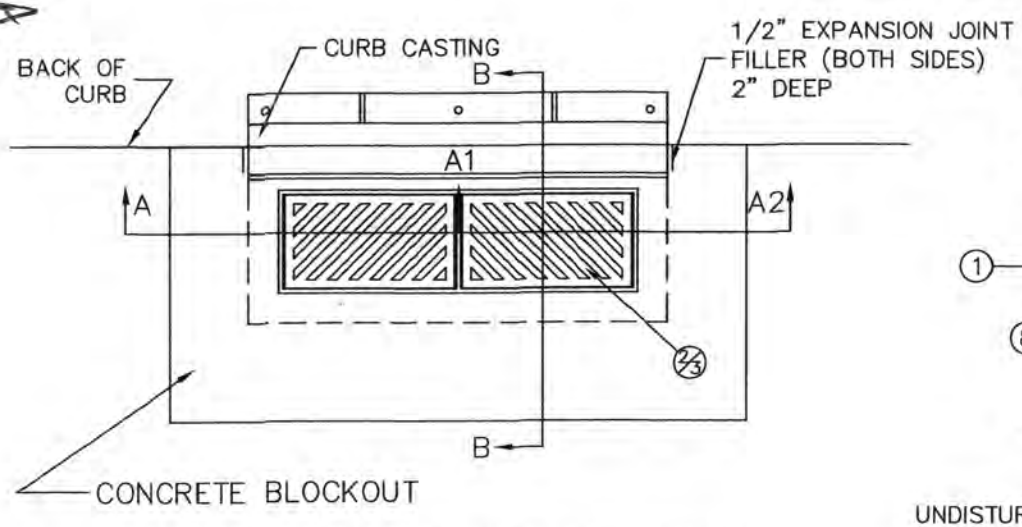

PLAN OF CATCH BASIN

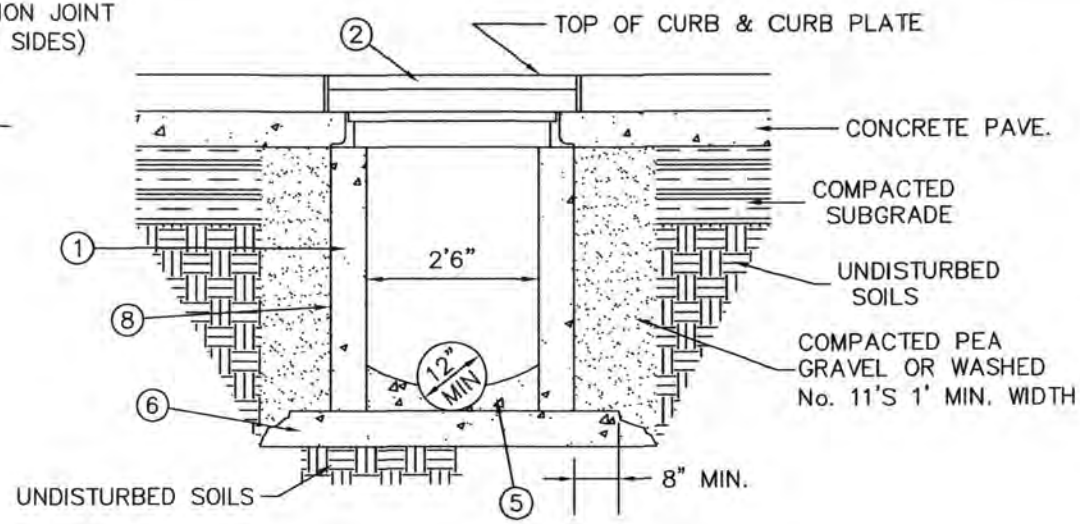

SECTION A–A–1

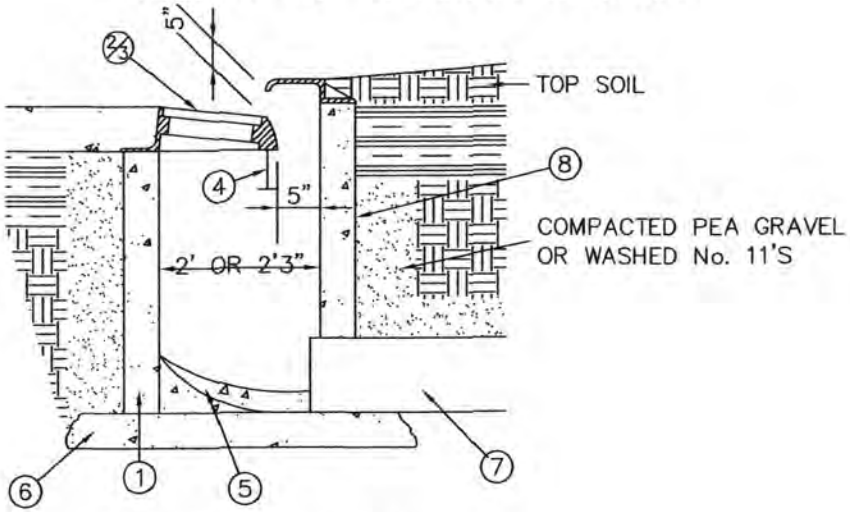

SECTION B–B

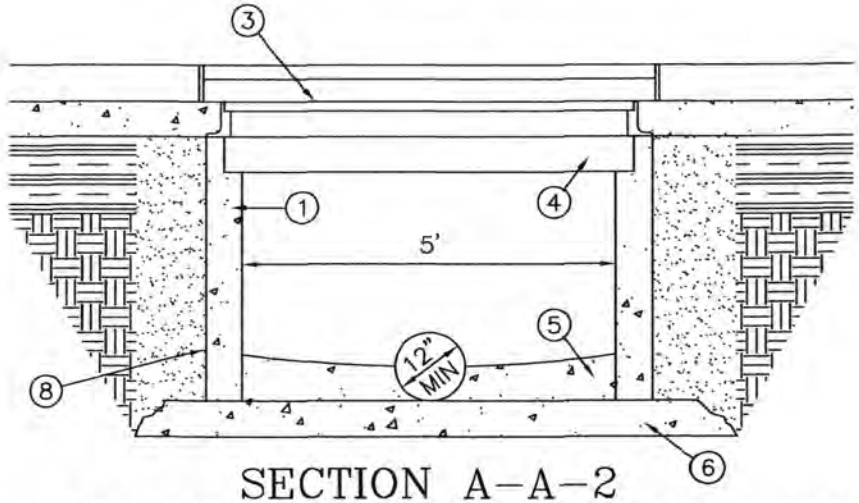

SECTION A–A–2

C.18

1. CONCRETE BRICK OR SLAB BLOCK MAY BE USED IN PLACE OF PRECAST OR CAST IN PLACE CONCRETE. SIDEWALLS SHALL BE 6" NOMINAL THICKNESS W/HORIZONTAL REINFORCEMENT EVERY 16 INCHES.
2. SINGLE INLET: FRAME, GRATE AND CURB PLATE – NEENAH R–3289–C OR APPROVED EQUAL.
3. DOUBLE INLET: FRAME, GRATE AND CURB PLATE – NEENAH R–3288–E2 OR APPROVED EQUAL.
4. 5–6 X 12.5 X 6' STEEL BEAM (USE WITH SEPARATE OR BOLTED INLETS).
5. 4" MIN. DEPTH 4000 PSI AE CONCRETE WITH SCRIBED INVERT.
6. 6" MIN. DEPTH 4000 PSI AE CONCRETE EXTENDED MIN. 8" BEYOND EXTERIOR OF BOX.
7. 12" MIN. DIA. PIPE (FOR ALL PIPE TYPES AND SIZES SEE SECTION 7.0)
8. UFT HOLES AND JOINTS SHALL NOT YIELD AN OPENING GREATER THAN THE SIZE OF AGGREGATE BACKFILL.

PHASE B PARTS 2 & 3

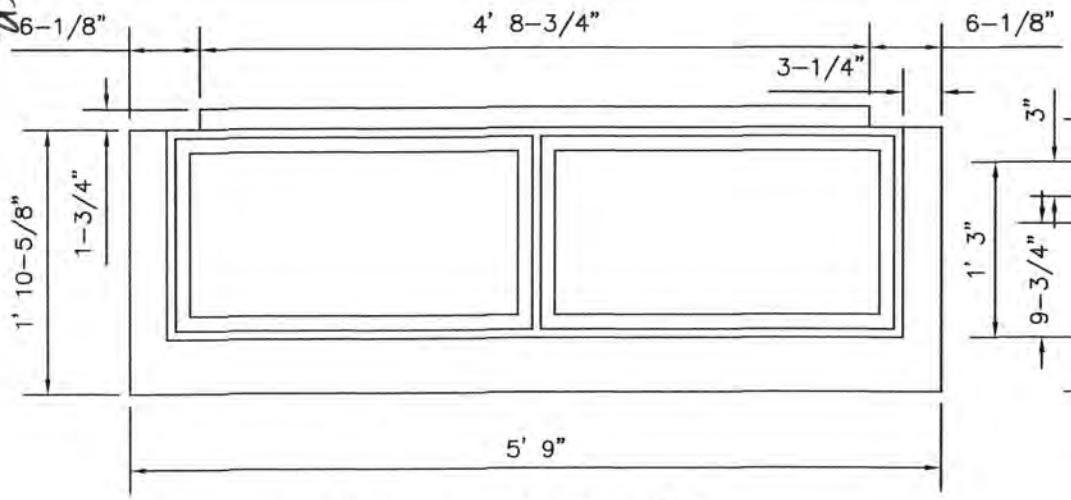

PLAN – DOUBLE

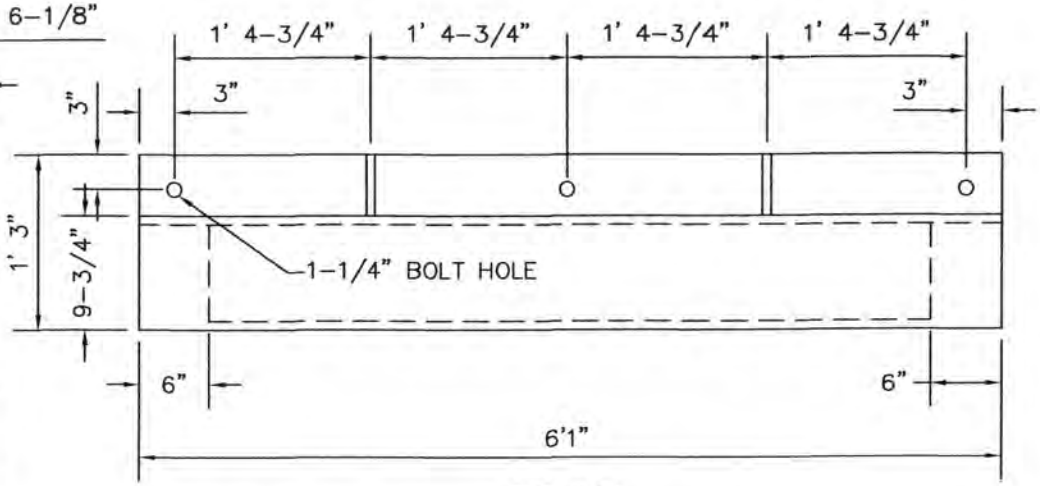

PLAN

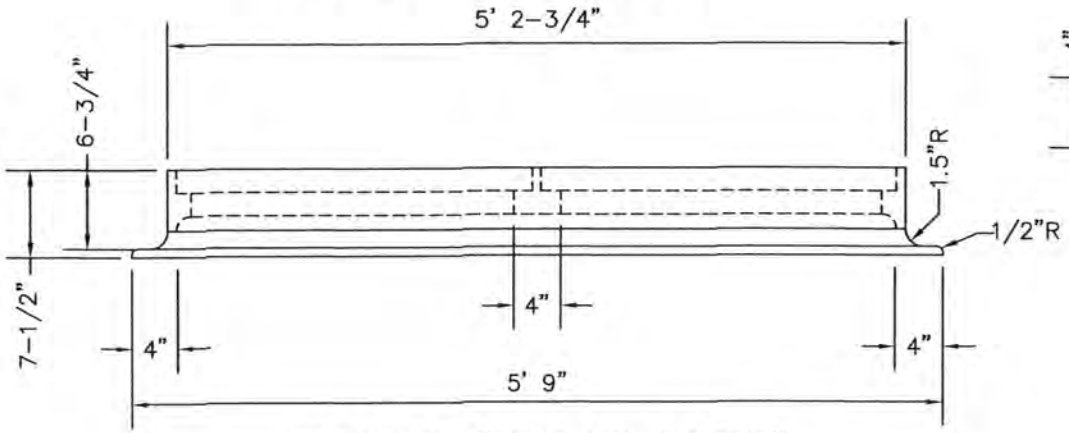

FRAME (FRONT VIEW)

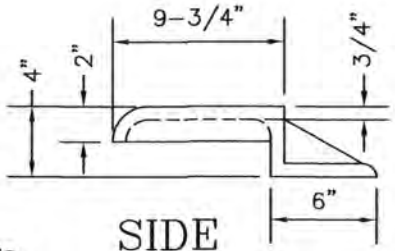

SIDE

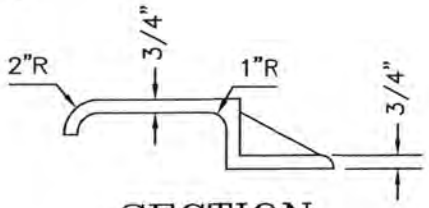

SECTION

CURB PLATE

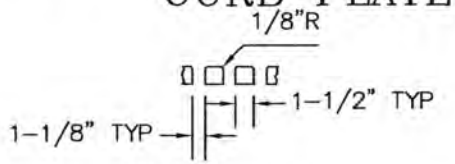

SECTION A–A

PHASE B
PARTS 2 & 3

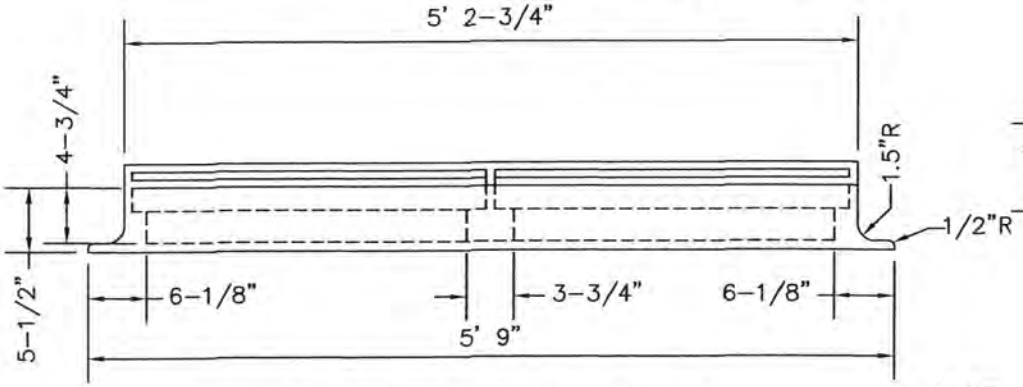

FRAME (BACK VIEW)

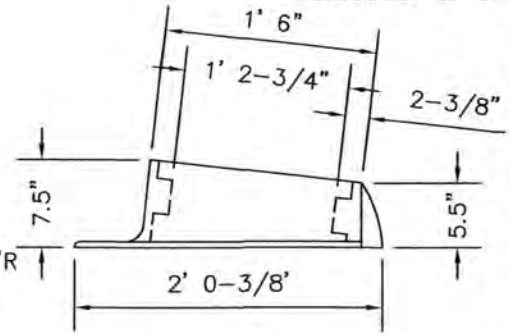

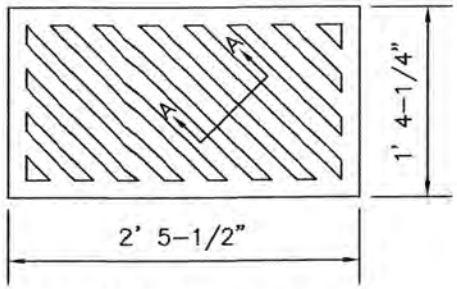

GRATE PLAN

CB CASTING DETAILS – DOUBLE

NOTE: SPECIFICATIONS PER NEENAH R-3288-E OR EQUIVALENT

CONCRETE HEADWALL

HEADWALL TYPE	DIAMETER OF PIPE	HEADWALL DIMENSIONS									CUBIC YARDS CONCRETE FOR ② ONE HEADWALL	
		A	B	C	D	E	F	G	H①	J	EARTH	ROCK
STANDARD	12"	1'-8"	1'-2"	4'-0"	2'6"	–	–	–	–	6'-0"	1.05	0.87
	15"	1'-8.5"	1'-2.5"	4'-3"	2'-9"	–	–	–	–	6'-9"	1.25	1.03
	18"	1'-9"	1'-3"	4'-6"	3'-0"	–	–	–	–	7'-6"	1.48	1.23
	21"	1'-9.5"	1'-3.5"	4'-9"	3'-3"	–	–	–	–	8'-3"	1.73	1.46
	24"	1'-10"	1'-4"	5'-0"	3'-6"	–	–	–	–	9'-0"	1.99	1.69
RAISED	12"	1'-8"	1'-2"	4'-6"	3'-0"	–	–	–	–	7'-6"	1.45	1.23
	15"	1'-8.5"	1'-2.5"	4'-9"	3'-3"	–	–	–	–	8'-3"	1.69	1.43
	18"	1'-9"	1'-3"	5'-0"	3'-6"	–	–	–	–	9'-0"	1.96	1.67
	21"	1'-9.5"	1'-3.5"	5'-3"	3'-9"	–	–	–	–	9'-9"	2.25	1.93
	24"	1'-10"	1'-4"	5'-6"	4'-0"	–	–	–	–	10'-6"	2.54	2.19
STANDARD ELL	12"	1'-8"	1'-2"	4'-0"	2'-6"	2'-0"	3'-8"	3'-0"	2'-6"	4'-8"	1.19	0.99
	15"	1'-8.5"	1'-2.5"	4'-3"	2'-9"	2'-3"	3'-11.5"	3'-6"	2'-9"	5'-2.5"	1.42	1.19
	18"	1'-9"	1'-3"	4'-6"	3'-0"	2'-6"	4'-3"	4'-0"	3'-0"	5'-9"	1.67	1.41
	21"	1'-9.5"	1'-3.5"	4'-9"	3'-3"	2'-9"	4'-6.5"	4'-6"	3'-3"	6'-3.5"	1.93	1.63
	24"	1'-10"	1'-4"	5'-0"	3'-6"	3'-0"	4'-10"	5'-0"	3'-6"	6'-10"	2.22	1.89
RAISED ELL	12"	1'-8"	1'-2"	4'-6"	3'-0"	2'-9"	4'-5"	3'-9"	3'-3"	5'-5"	1.62	1.37
	15"	1'-8.5"	1'-2.5"	4'-9"	3'-3"	3'-0"	4'-8.5"	4'-3"	3'-6"	5'-11.5"	1.88	1.59
	18"	1'-9"	1'-3"	5'-0"	3'-6"	3'-3"	5'-0"	4'-9"	3'-9"	6'-6"	2.16	1.85
	21"	1'-9.5"	1'-3.5"	5'-3"	3'-9"	3'-6"	5'-3.5"	5'-3"	4'-0"	7'-0.5"	2.47	2.12
	24"	1'-10"	1'-4"	5'-6"	4'-0"	3'-9"	5'-7"	5'-9"	4'-3"	7'-7"	2.79	2.41

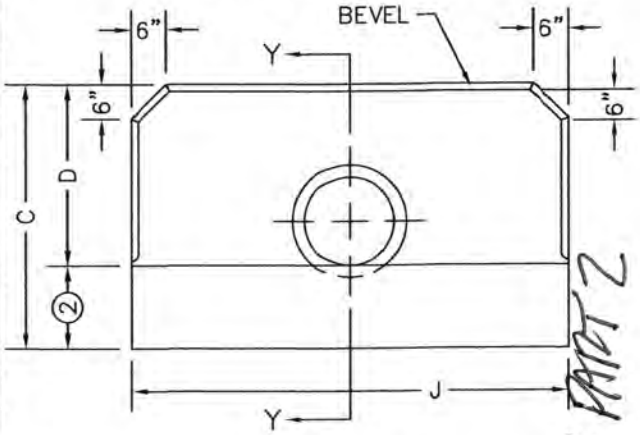

ELEVATION

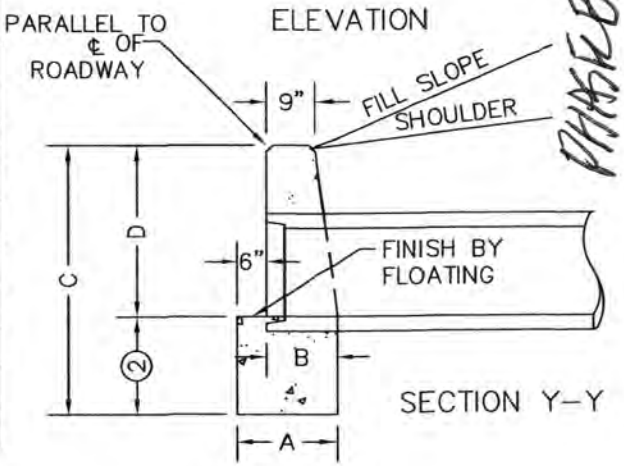

SECTION Y–Y

CONCRETE ELL HEADWALL

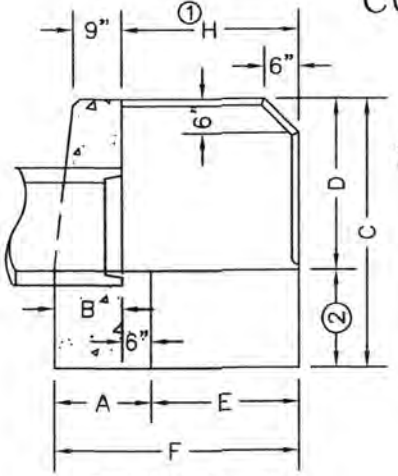

SECTION X–X

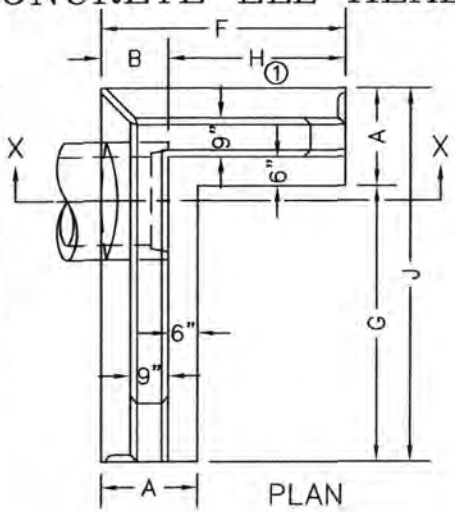

PLAN

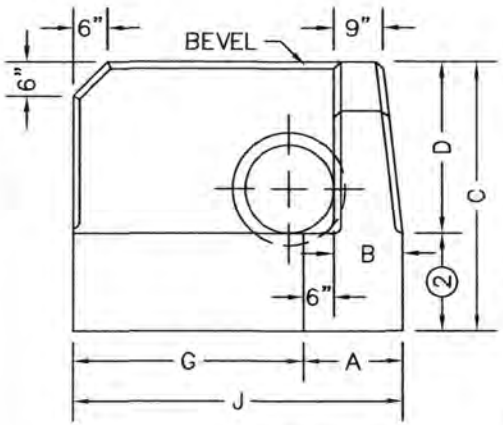

ELEVATION

NOTES

CIRCULAR PIPE INCLUDES SLIGHTLY ELLIPTICAL CONCRETE PIPE WITH CIRCULAR REINFORCMENT.

VOLUME DISPLACED BY BARREL OF PIPE HAS BEEN COMPUTED USING INSIDE DIMENSION OF PIPE.

① THE DIMENSION AND/OR THE ANGLE OF INTERSECTION BETWEEN THE WALLS MAY BE VARIED ON CONSTRUCTION.

② VOLUME BASED ON VALUES OF 18" FOR EARTH, 12" FOR ROCK.

FRONT VIEW

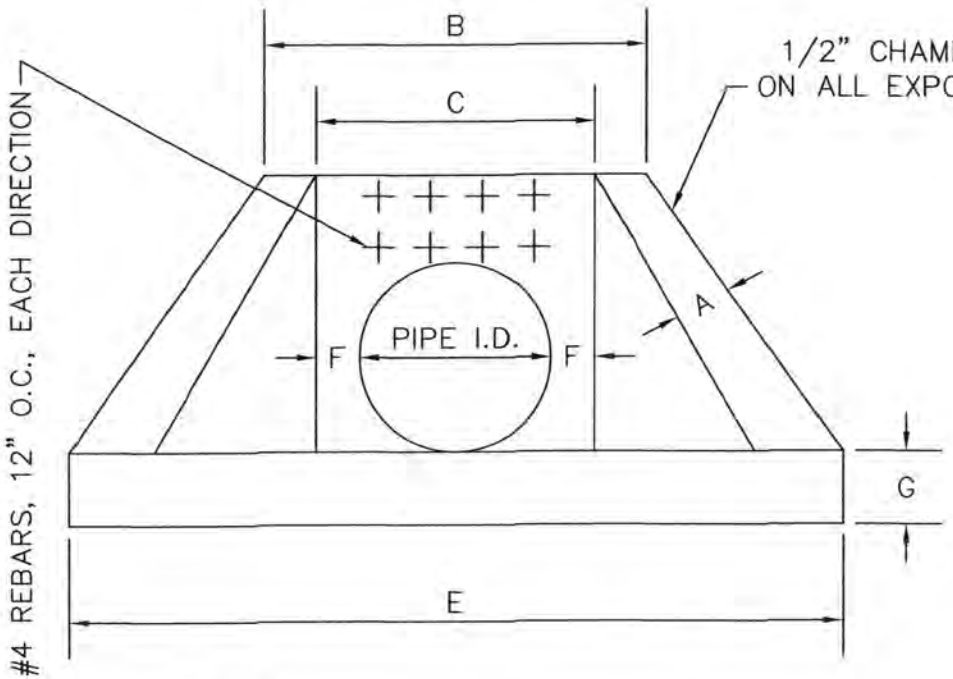

TOP VIEW

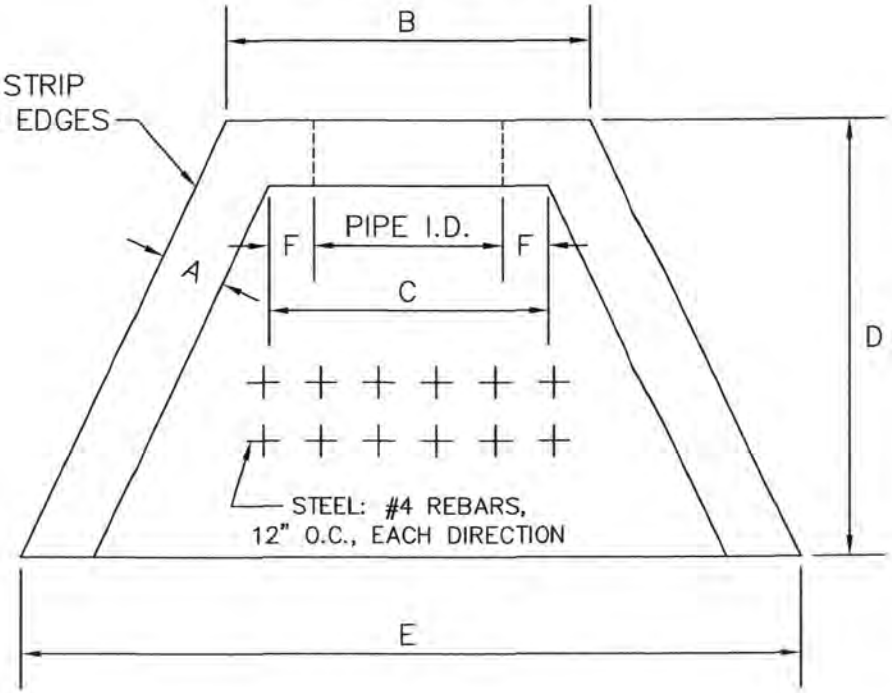

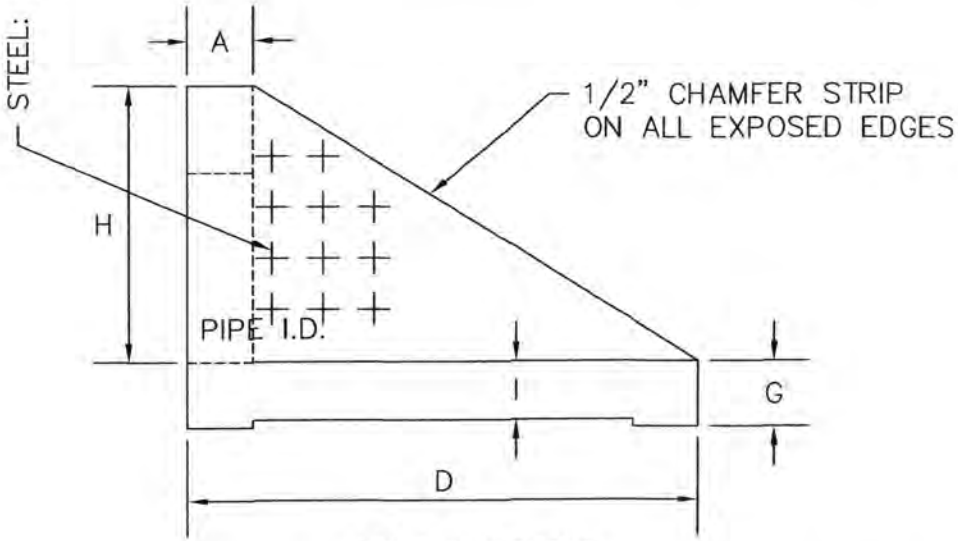

SIDE VIEW

MINIMUM DIMESIONS

A: 7"
B: PIPE I.D. + 14"
C: PIPE I.D. + 6"
D: 4' OR 2 X PIPE I.D. WHICHEVER IS GREATER
E: 5' OR 2.5 X PIPE I.D. WHICHEVER IS GREATER
F: 3"
G: 8"
H: PIPE I.D. + 12"
I: 6"

PHASE B PART 2

HEADWALL DETAIL FOR 12" THRU 36" I.D. PIPE

C.26

City of Union, Boone County, Kentucky PHASE C PART 1

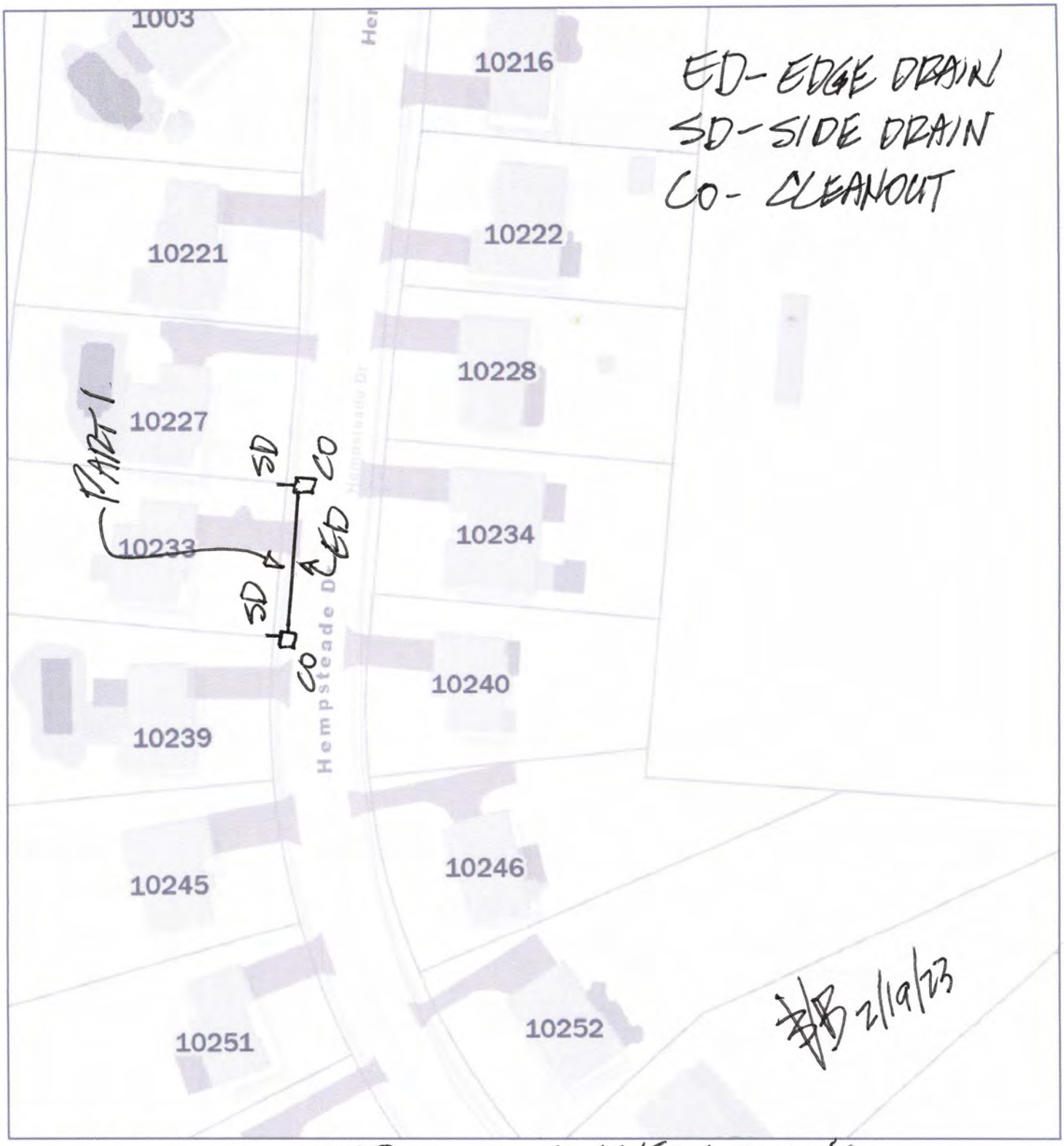

2/16/2023, 10:32:17 AM

SRP 2023 EDGE/SIDE DRAINS
FROM ADDRESS 10239 TO 10227

Buildings (LOD 18-21)
Tax Parcels (LOD 17-23)
Parcel Tract (outline)
Roadways
Roadway

Exterior Features
Deck
Swimming Pool
Patio
Driveway
Sidewalk

0 0.01 0.01 0.03 mi
0 0.01 0.02 0.04 km

Esri Community Maps Contributors, © OpenStreetMap, Microsoft, Esri, HERE, Garmin, SafeGraph, GeoTechnologies, Inc, METI/NASA, USGS, EPA, NPS, US Census Bureau, USDA, GIS Services Division, Boone County Planning Commission

Copyright 2023 | Boone County Planning Commission | All rights reserved.

City of Union, Boone County, Kentucky PHASE C PART 2

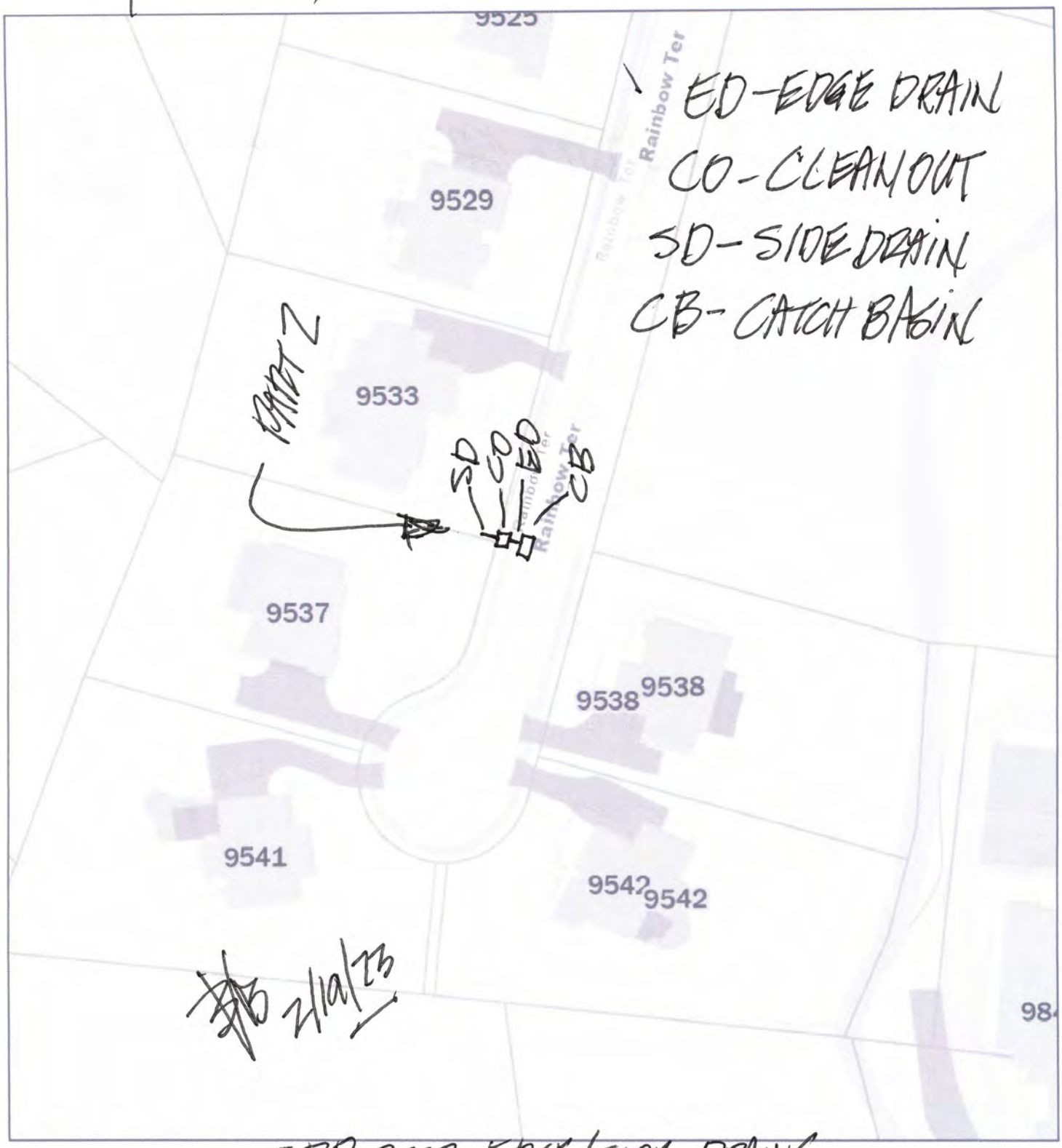

2/16/2023, 10:35:07 AM

SRP 2023 EDGE/SIDE DRAINS BETWEEN ADDRESS 9537 & 9533

1 1,128

0 0.01 0.01 0.03 mi

0 0.02 0.04 km

Buildings (LOD 18-21)

Tax Parcels (LOD 17-23)

Parcel Tract (outline)

Roadways

Roadway

Private Roadway

Parking Lots

Asphalt

Concrete

Exterior Features

Deck

Patio

Driveway

Sidewalk

Intermittent Blue Line Streams

Perennial Blue Line Streams

Waterbodies (LOD 16-23)

Esri Community Maps Contributors, © OpenStreetMap, Microsoft, Esri, HERE, Garmin, SafeGraph, GeoTechnologies, Inc, METI/NASA, USGS, EPA, NPS, US Census Bureau, USDA, GIS Services Division, Boone County Planning Commission

Copyright 2023 | Boone County Planning Commission | All rights reserved.

City of Union, Boone County, Kentucky PHASED

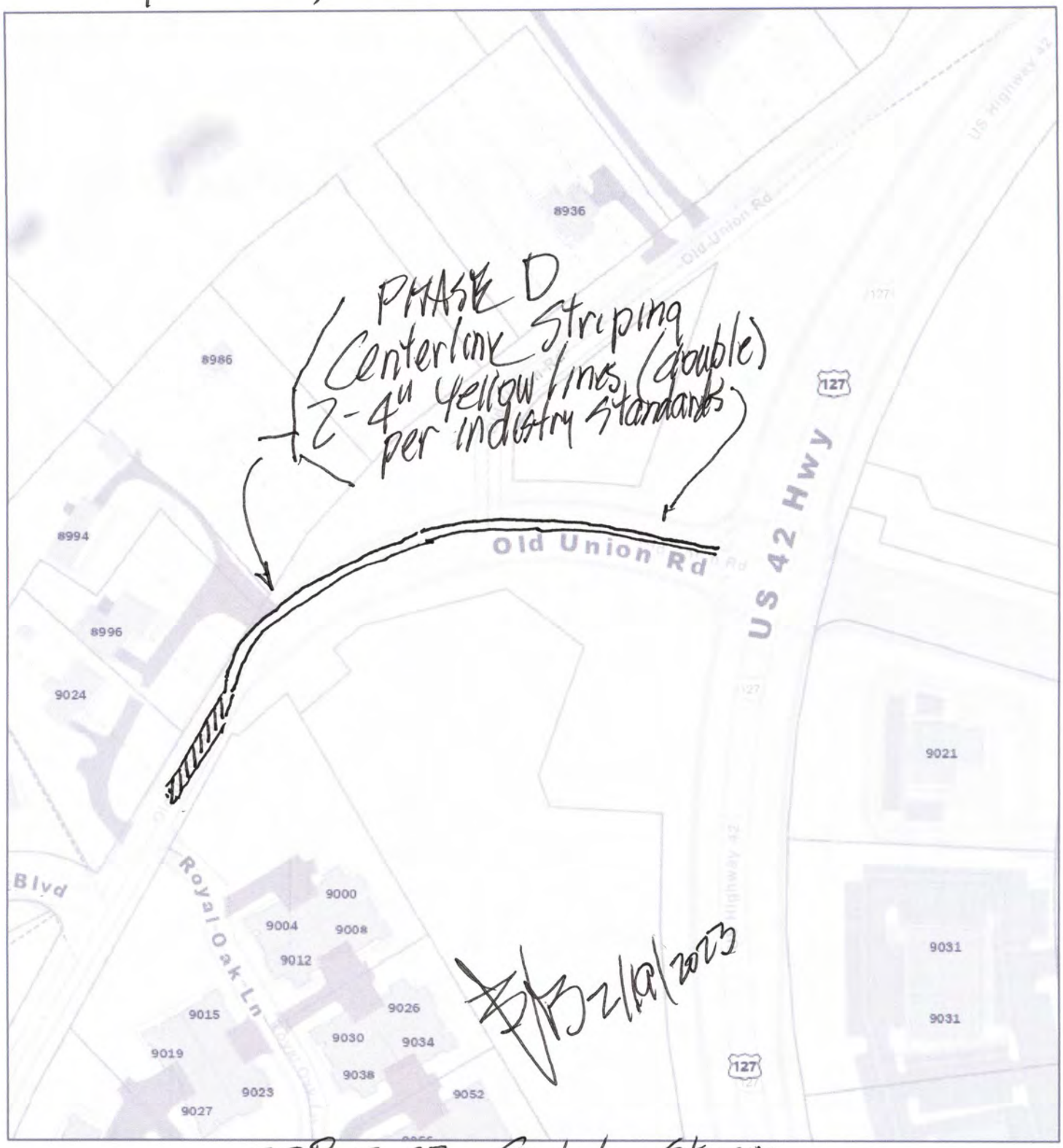

2/16/2023, 10:41:30 AM SRP 2023 Centerline Striping 1:2,257

0 0.01 0.03 0.06 mi

0 0.02 0.04 0.09 km

Buildings (LOD 18-21)
Tax Parcels (LOD 17-23)
Parcel Tract (outline)
Roadways
Roadway
Private Roadway
Crosswalk
Other
Parking Lots
Asphalt
Exterior Features
Deck
Patio
Driveway
Sidewalk
Waterbodies (LOD 16-23)

Esri Community Maps Contributors, © OpenStreetMap, Microsoft, Esri, HERE, Garmin, SafeGraph, GeoTechnologies, Inc, METI/NASA, USGS, EPA, NPS, US Census Bureau, USDA, GIS Services Division, Boone County Planning Commission

Copyright 2023 | Boone County Planning Commission | All rights reserved.

City of Union, Boone County, Kentucky PHASE D

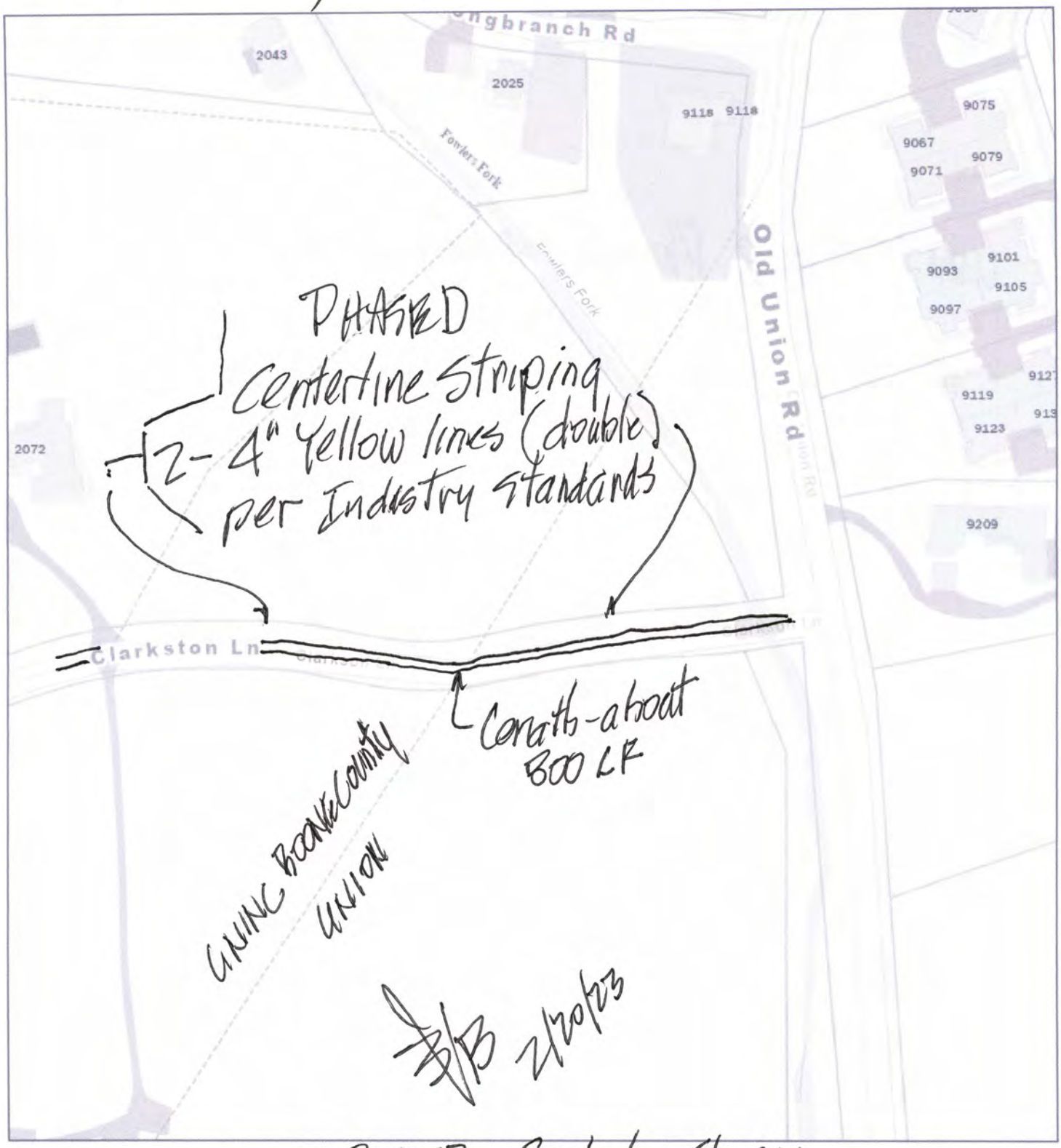

2/16/2023, 10:39:51 AM

SRP 2023 - Centerline Striping

1:2,257

0 0.01 0.03 0.06 mi

0 0.02 0.04 0.09 km

Buildings (LOD 18-21)

Tax Parcels (LOD 17-23)

Parcel Tract (outline)

Roadways

Roadway

Bridge

Parking Lots

Asphalt

Concrete

Exterior Features

Deck

Swimming Pool

Patio

Driveway

Sidewalk

Perennial Blue Line Streams

Waterbodies (LOD 16-23)

Esri Community Maps Contributors, © OpenStreetMap, Microsoft, Esri, HERE, Garmin, SafeGraph, GeoTechnologies, Inc, METI/NASA, USGS, EPA, NPS, US Census Bureau, USDA, GIS Services Division, Boone County Planning Commission

Copyright 2023 | Boone County Planning Commission | All rights reserved.